UNDERSTANDING M-COMMERCE
A Consumer-Centric Model

CONSTANTINOS COURSARIS and KHALED HASSANEIN

The phenomenal growth in the use of cellular phones and, more recently, also of wirelessly enabled Personal Digital Assistants (PDAs), is giving rise to yet another revolution in the business world. This revolution is focused on conducting business on the move or mobile commerce (m-Commerce). This trend is fueled by a consumer interest in being able to access business services or to communicate with other consumers anytime and anywhere. It is also motivated by the interest of the business community to extend their reach to customers at all times and at all places. This paper starts by exploring the similarities and differences between m-Commerce and e-Commerce, followed by an overview of the technologies that support m-Commerce and in particular wireless networks, protocols and devices. A value network for m-Commerce is then presented, followed by an overview of different m-Commerce revenue models. A consumer-centric m-Commerce model for analyzing the types of interactions that a typical consumer might be engaged in within a wireless environment is then proposed, followed by an analysis of the various consumer needs and concerns for m-Commerce services/products. Several business applications are then explored in the context of the proposed interaction model. Finally, the necessary business and technological requirements for the ultimate success of these m-Commerce applications are discussed along with some managerial implications.

KEYWORDS: m-Commerce, e-Commerce, m-Consumer, wireless technology, wireless networks, wireless devices, wireless protocols, m-Consumer needs and concerns, m-Commerce business applications, m-Commerce value network, m-Commerce revenue models.

INTRODUCTION

Less than a decade after the e-Commerce revolution and its associated global impact on the business environment, it appears that another step has been taken in the evolution of networked computing. Transitioning from wired to wireless networks, the latest buzz in the

• **Khaled Hassanein and Constantinos Coursaris**, Michael G. DeGroote School of Business, McMaster University, 1280 Main Street West, Hamilton, Ont., L8S 4M4, Canada, e-mail: hassank@mcmaster.ca and ccoursaris@hotmail.com

QUARTERLY JOURNAL OF ELECTRONIC COMMERCE Vol. 3/No. 3/2002, pages 247-271 ISSN 1528-3526

industry is mobile commerce or m-Commerce (Bushell, 2001).

m-Commerce could be viewed as a subset of e-Commerce. The name "m-Commerce" arises from the mobile nature of the wireless environment that supports mobile electronic business transactions. Devices, including digital cellular phones, Personal Digital Assistants (PDAs), pagers, notebooks, and even automobiles, can already access the Internet wirelessly and utilize its various capabilities, such as e-mail and Web browsing, for example (Little, 2001). m-Commerce is a natural extension of e-Commerce as they share fundamental business principles, but m-Commerce acts as another channel through which value can be added to e-business processes. It also provides for new ways through which evolving customer needs could potentially be met (724 Solutions, 2000). Businesses and consumers are two distinct types of customers that exist in the m-Commerce industry. The focus of this paper will be on the mobile consumer (m-Consumer) segment of the m-Commerce market.

The paper starts with an introduction outlining the main similarities and differences between m-Commerce and e-Commerce, as well as providing an overview of the technologies used to support m-Commerce activities, and the m-Commerce market. We then examine the m-Commerce landscape, introduce an m-Commerce value network that captures the multitude of interactions that take place between parties involved in the m-Commerce market place, and review the different m-commerce revenue models. Next, a model is introduced that identifies the various entities involved in consumer-focused m-Commerce activities and their different modes of interaction. We then turn our attention to analyzing the associated needs and concerns of the m-Consumer, the roles of the different parties within the m-Commerce value network towards addressing the m-Consumer concerns are also outlined. Section 5 outlines current and future business applications addressing the identified m-Consumer needs. Finally, we present a discussion summarizing the main findings of this research and outlining some possible solutions for identified m-Consumer concerns as well as some associated managerial implications and directions for future research.

Differences between m-Commerce & e-Commerce

The m-Commerce and the e-Commerce business environments and activities have a lot in common. This is the case since they involve much of the same functionality in terms of facilitating electronic business over the Internet. However, some differences exist in the mode of communication, the types of Internet access devices, the development languages and communication protocols, as well as the enabling technologies used to support each environment. Differences in these four areas are explored below in more detail (Little, 2001):

- **Communication Mode:** The main mode of conducting wired e-Commerce is through a wired connection to a Local Area Network (LAN) while that for m-Commerce is through a wireless network. This is a fundamental difference between the two environments as it enables customers to engage in e-Commerce anytime/anywhere using various forms of wireless communication devices (e.g. cell phones or PDAs).
- **Internet Access Devices:** Wired e-Commerce is conducted mainly through desktop and laptop computers. m-Commerce, on the other hand, is conducted through a variety of wireless devices including cell phones, PDAs, and wireless-enabled laptops. Since most of these devices are more personal in nature than the usual desktop (i.e. they tend to be used by a single user who carries the device at most times), the potential for offering personalized products/services is higher. This trend is further enhanced by the ability of some

wireless devices to implicitly convey the current whereabouts of their user which makes it possible to make location-specific offers to mobile consumers. This also gives rise to more prominent privacy concerns than those experienced by consumers of wired e-Commerce.

- **Development Languages & Communication Protocols:** Most people are familiar with Hyper Text Markup Language (HTML), the language that runs the wired Web. Mobile devices, however, are running on one of two variations of HTML: Wireless Markup Language (WML) or compact HTML (cHTML). WML is used in most parts of the world, whereas cHTML is used by DoCoMo in Japan with plans for expansion. The need for WML and cHTML is due to mobile devices having to comply with new communication protocols (e.g. the Wireless Application Protocol (WAP) and DoCoMo's (Japan) proprietary protocol i-Mode). Different from the wired Web's Hyper Text Transfer Protocol (HTTP), these new protocols present compatibility issues and hence functional limitations.
- **Enabling Technologies:** Functional limitations arise in the m-Commerce environment as many of the existing technologies that enable e-Commerce on the Web with relative ease (e.g. cookies, JAVA, Active Server Pages, etc.) are not compatible with WAP. Although new standards that would address these issues (i.e. WAP 2.0) are currently under development, a tested and trustworthy system is still absent. This is not to say that business applications are not feasible at this stage, but that they are rather limited—for example, the lack of cookies in the wireless environment dampens marketing efforts, since the tracking of customer usage and online behaviour is not possible. In addition, mobile devices have a limited display area, processor memory, and speed. Hence, the user experience is very limited and usage becomes cumbersome, as it is limited to text and small images, with little or no animation, almost no interactivity, and very few navigational options. Consequently, hopes and efforts are being placed on voice-enabling technologies that could combat these challenges, but these technologies are not widely adopted yet.

m-Commerce Technology

Understanding how the m-Commerce environment has come to exist, as we know it today, as well as recognizing the strengths and weaknesses of the associated technologies in place, can provide the means through which the long-term direction of this industry could be assessed. Thus, the current state of wireless networks, wireless protocols, and wireless devices is discussed below, highlighting important milestones.

Wireless Networks

Wireless networks provide the backbone of m-Commerce activities. By utilizing these networks users can transmit data between mobile and other computing devices using wireless adapters without requiring a wired connection. Wireless networks were introduced as early as 1946, but a major milestone was the introduction of the Advanced Mobile Phone System (AMPS) that marked the arrival of cellular systems in 1983 in the United States. AMPS is an analog system used for voice communication (Ganci, 2001). AMPS systems represented the first generation of cellular systems (hence it is commonly referred to as 1G).

The evolution of wireless networks continued with the second-generation (2G) systems that were introduced in the 1990s. Several of these systems (e.g. TDMA, CDMA, GSM)[1] were also used primarily for voice applications, with the exception of the Short Message Service (SMS) capability offered by the GSM network. A recent upgrade of the 2G networks

TABLE 1
Wireless Networks' Technologies: Current & Future

Region	Current Network (2/2.5G)	Future Network (2.5/3G)
US	TDMA, D-AMPS, CDMA, GSM, Mobitex, CDPD	CDMA2000 (2003)
Europe	Mobitex, GSM, HSCSD, GPRS	EDGE, W-CDMA (2002)
Japan	cdmaOne, PDC, W-CDMA	cdmaOne 3G (2002)

Note: [5]D-AMPS: Digital-AMPS, CDPD: Cellular Digital Packet Data, PDC: Personal Digital Cellular.

is referred to as 2.5G wireless networks (e.g. HSCSD, GPRS, EDGE).[2] Being either circuit-switched or packet-switched, these networks are primarily intended to allow for increases in data transmission rates and, in the case of packet-switched networks, an "always on" connection (Peck, 2001).

The hype surrounding wireless networks, however, revolves around the third-generation (3G) systems, expected to be deployed over the next few years, with certain regions already having access to them (e.g. Japan). These networks are commonly referred to as IMT-2000 on a global scale, and regional implementations are uniquely named (e.g. CDMA2000 in North America, W-CDMA/ UMTS in Europe & Japan, cdmaOne in Japan).[3] Along with voice functionality, 3G networks support higher-speed transmissions for high-quality audio and video, as well as providing a global "always on" roaming capability (Peck, 2001).

Table 1 shows which wireless network technologies are currently in use for the regions of North America, Europe, and Japan (Peck, 2001). It also outlines what kinds of technologies are soon to be rolled out in these regions. Figure 1 illustrates the path to the anticipated ubiquitous 3G environment (ITU, 2001).

Wireless Protocols

While wireless networks evolved the two main communication protocols, WAP and i-Mode, experienced their own evolution. Phone.com, Ericsson, Motorola and Nokia introduced WAP in 1997. WAP progressed from enabling basic functionality, such as WML and WMLScript communications, in its

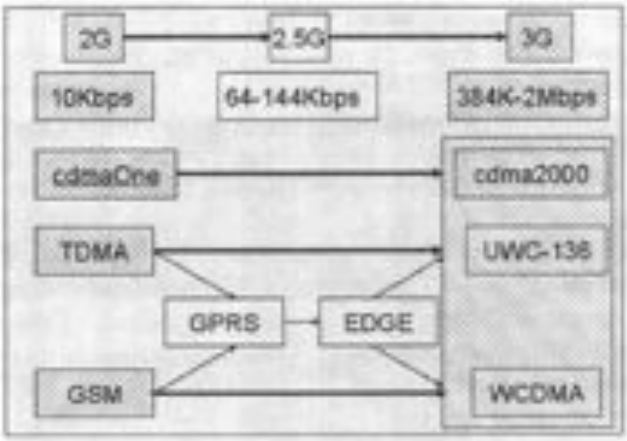

FIGURE 1
Evolution of Wireless Networks

first release, to supporting graphics, voice-enabled actions (i.e. wireless Web browsing), and video, as announced in the release of WAP 2.0, at the end of July of 2001 (WAP Forum, 2001). i-Mode, on the other hand, was introduced in 1999 by NTT DoCoMo and has grown in popularity to support 30 million users in less than three years. The capabilities of i-Mode were enhanced during 2001 through the introduction of i-appli, which incorporates JAVA and Secure Socket Layer (SSL) encryption capabilities, i-area, which provides location-specific information such as weather, local guide, maps and traffic, and i-motion, which enables viewing of video-clips (NTT, 2002).

It is unlikely that one of these protocols will prevail over the other on a global basis. The more likely scenario will be that wireless devices will evolve to support both protocols seamlessly.

Wireless Devices

Until recently wireless devices could be placed in three distinct categories: mobile phones, wireless Personal Digital Assistants (PDAs), and wireless laptops. Recently, however, hybrid products have been introduced that combine features from two or all three categories with the intent of providing optimal capabilities to mobile users.

Mobile phones have been around the longest and have experienced the greatest change since their inception. In the beginning, analog cellular phones were used exclusively for voice communications; next, digital phones were introduced, initially for voice communications but with added features (e.g. Call Display) and were later further enhanced with additional capabilities (e.g. Instant Messaging).

PDAs experienced their own evolution, beginning as organizers for personal information with limited functions (e.g. "To Do" lists, Calendar). Currently, some PDAs have wireless transmission and Web browsing capabilities. The major operating systems for PDAs are Palm OS (e.g. Palm, IBM WorkPad PC, Handspring Visor), EPOC (e.g. Ericsson R380, Nokia 9210 Communicator, Psion), and Windows CE (e.g. Compaq iPac, HP Jornada, Casio E-125).

Wireless laptops include notebooks or portable PC browser clients that are wirelessly Web-enabled (e.g. IBM ThinkPad T20 connected with a GSM mobile phone through the infrared port). Although these devices are capable of supporting m-Commerce activities, they do not represent the main point of access for such activities due to their relatively larger sizes and heavier weights compared to other mobile devices (Peck, 2001).

The most recent development in mobile devices was the introduction of "smart phones." These are mobile devices that are capable of tasks ranging from e-mail retrieval now to video and music streaming in the near future. "Smart Phones" are a combination of cell phones and PDAs (e.g. Kyocera QCP™ 6035 Smart Phone, Samsung SPH-I300) (Pocket, 2001). This convergence trend is expected to continue in the foreseeable future to support consumer demands for mobile devices that can provide a wider range of capabilities (Keyte, 2001).

m-Commerce Market Overview

The growing importance of m-Commerce is fueled by the phenomenal growth in the wireless market in general. Figure 2 shows how the relative adoption rate of wireless services exceeds that of previous major technologies (Morrison, 2001).

According to some forecasts, the global customer base for wireless Internet access is expected to match the overall wireless subscriber base by 2004 (over 1.2 billion subscribers, or 20% of the world's population) (Morrison, 2001b); this represents the number of users who have access to the wireless Internet, but may not necessarily be using it.

This growth in wireless Internet subscribers is expected to be matched by a growth in m-Commerce related activities that vary by

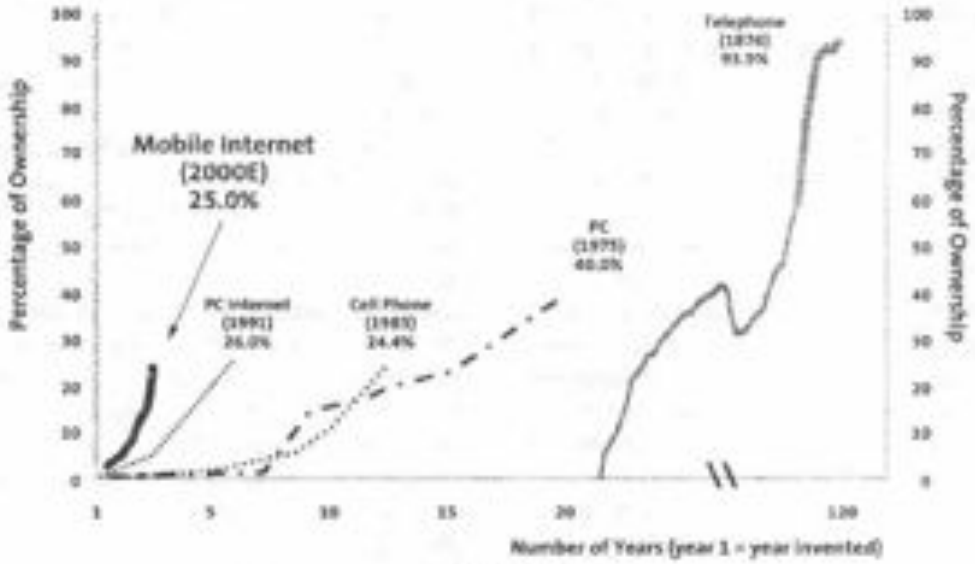

FIGURE 2
US Adoption Rates for Various Communication and Internet Access Devices (Morrison, 2001)

region, as indicated in Table 2, which outlines forecasted regional m-Commerce revenues. These revenue estimates by Jupiter are on the conservative side at $22.2 billion, compared to other research groups that predict m-Commerce revenues to be larger by as much as five times (Canvas, 2001). As such m-Commerce represents a market with substantial financial returns, along with additional benefits, such as improved branding and customer service through the exploitation of the fast growing wireless channel. According to Table 2, the fastest growing and largest markets for m-Commerce are found in Asia, and in particular in Japan, followed by Europe.

M-COMMERCE VALUE NETWORK & REVENUE MODELS

The revenue and market size forecasts for m-Commerce described in the previous section incorporate contributions by both the voice and non-voice m-Commerce market. How-

TABLE 2
Regional m-Commerce Revenue (USD billion) (Canvas, 2001)

Region	2000	2001	2002	2003	2004	2005
N. America	0.01	0.1	0.2	0.7	1.8	3.5
W. Europe	0.015	0.1	0.5	1.7	4.6	7.8
Asia	0.4	1.3	2.6	5.0	7.4	9.4
S. America	0.0	0.0	0.0	0.1	0.2	0.5
Other	0.0	0.0	0.1	0.2	0.4	1.0
Global	0.425	1.5	3.4	7.6	14.5	22.2
US	0.01	0.1	0.2	0.6	1.7	3.3
Japan	0.4	1.2	2.1	3.5	4.5	5.5

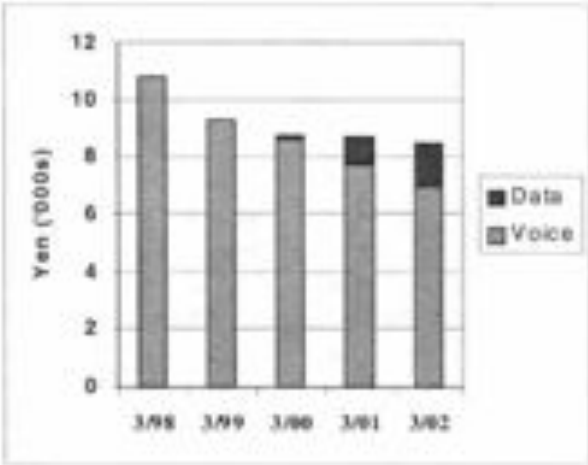

FIGURE 3
NTT DoCoMo Monthly ARPU in '000s Yen (Source: NTT DoCoMo, 2002)

ever, as newer and more efficient technologies become mainstream there will be an increasing demand for data services, which will boost the size of this industry to new heights. Already Average Revenue Per User (ARPU) for mobile phone carriers are on the decline, consequent of both heightened competition and increased availability of substitute communication products, such as e-mail (Jonason, 2001; Yanis, et al., 2002). Such global ARPU declines are evident in the US where ARPU has declined by 12% in the last year and is expected to decline by another 40% by 2005 (Napier, 2002). This is also the case in Canada where ARPU has declined by 30% over the last six years (CWTA, 2002). Therefore, the projected growth of the wireless industry is more attributed to the non-voice (or data) m-Commerce, such as mobile multimedia services, that will produce new revenue streams by offering non-voice value-added wireless services to consumers (Mobile, 2001). One such case where the offering of non-voice wireless services is compensating for the decline in voice-related ARPU is that of Japan's NTT DoCoMo who has been very successful at recovering lost voice-related ARPU with data-related ARPU over the last two years (Figure 3).

The m-Commerce Value Network

In offering m-Commerce data-services, Turban defines a corresponding value chain as shown in Figure 4 (Turban, et al., 2002). According to his definition, as a result of a highly fragmented m-Commerce industry,

Technology Platform Vendors → Infrastructure and Equipment Vendors → Application Platform Vendors → Application Developers → Content Providers → Content Aggregators → Mobile Portal Providers → Mobile Network Operators → Mobile Service Providers → Handset Vendors → Customers

FIGURE 4
m-Commerce Value Chain (Source: Turban, et al., 2002)

Content → Packaging → Mobile Operator → Transport → User Access

FIGURE 5
Traditional m-Commerce Value Chain (Source: Kalluvilayil, 2001)

each party has a clearly defined role that contributes to the overall process in a serial manner. However, Kalluvilayil discussed and rejected a traditional value chain for m-Commerce that is also serial in nature (Figure 5) on the argument that such a simplistic value chain is no longer viable given the complexity of interactions taking place within the m-commerce market place (Kalluvilayil, 2001).

Several companies have positioned themselves to play a multi-faceted role within the m-Commerce market place, thus creating an entirely new business landscape where often players have overlapping roles. The m-Commerce value chain becomes more complex and dynamic with multiple interactions that do not necessarily preserve a sequential nature and where all market players need to contribute for the industry to reach an optimal level. Thus, here we propose a new value network (Figure 6) that better captures the interactions between the various players in this industry. This value network is made up of customers, network operators, service providers, technology vendors, application developers, and content providers. Because of the multiple inter- dependencies among value network members, if any one of these parties is underdeveloped (or absent), then the entire network could potentially break down. In addition, value network members may be made up of additional subsets of companies with more specific business objectives; these possible subsets are identified next, where each value network member is discussed in detail (Turban, 2002; Kalluvilayil, 2001; Kalakota, et al., 2002; Buckingham, 2000):

- ***Customers:*** Customers may be the most important m-Commerce value network member, since in the absence of customer demand, there may be little, if any, need for any of the other players in the value network to be present. For example, if the wireless customer does not see the value in non-voice mobile services made available by content providers (e.g. weather information), then there is little point in network operators maintaining network service (e.g. GPRS), technology vendors manufac-

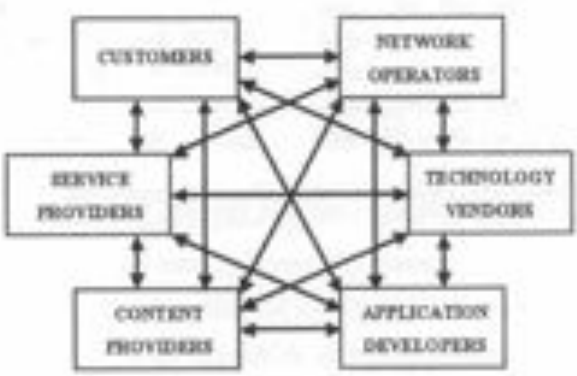

FIGURE 6
The m-Commerce Value Network

turing wireless products (e.g. handsets), service providers offering wireless products and services (e.g. wireless network access), or applications developed (e.g. wireless chat).

- ***Network Operators:*** Arguably the second most significant party after the customer in the m-Commerce value network is the network operator (or network carrier). Network operators are crucial in the success of the m-Commerce industry, as they are responsible for a wide range of activities. Such activities include deciding if and when to invest in network infrastructure supporting non-voice services, educating customers about the availability and uses of these new services, and incurring additional expenses to support compatibility with networks of other operators. Such companies typically utilize a subscription fee business model with customers, as well as a transaction-based fee (e.g. per "hit") business model with content providers.
- ***Service Providers:*** Similar to the various Internet Service Providers (ISPs) for the wired Web, Mobile Service Providers (MSPs) emerged to provide an easy way for customers to gain access to wireless networks and available solutions. In addition to this function, some literature includes content providers and operators under this category, as they have come to expand their offerings into the area of servicing customers as well (Kalluvilayil, 2001). Strictly speaking, however, MSPs sell products and services of others under their name to customers. The typical business models for this group are based on subscription fees as well as per-minute fees.
- ***Application Developers:*** Application developers include software developers and system integrators that provide a wide range of services, such as hosting and transaction processing. Ultimately these companies are responsible for delivering a practical solution to customers based on available technology. Thus, if they are successful in identifying and addressing customer needs, returns will be high for all involved in providing non-voice mobile services. Application developers may offer off-the-shelf products (e.g. chat programs), customized products developed specifically to meet one customer's requirements, or hybrid products based on generic products that are further customized with application-specific data. Typically the business model adopted by these companies is based on software licensing fees, utility transaction costs, and subscription fees.
- ***Technology Vendors:*** Technology vendors transform what is desired and theoretically designed to what is actually available. They supply the necessary hardware and some of the software to enable the convergence of telecommunications and IP networks, ranging from transmission towers to mobile handset receivers. Internally this group is made up of companies concentrating on different aspects of infrastructure; these further classifications can be seen in Figure 4, where this group is further broken down into "technology platform vendors" (e.g. Palm and Microsoft), "infrastructure and equipment vendors" (e.g. Alcatel and Ericsson), "application platform vendors" (e.g. IBM and Motorola), and "handset vendors" (e.g. Palm and Compaq). These groups need to coordinate their efforts to prevent market inefficiencies, such as delays in releasing appropriate handsets for the latest networks made available (e.g. the case with WAP-enabled handsets). Such inefficiencies can cause not only financial turmoil for some of the players, but even complete abandonment and failure of new technology initiatives. The typical business model for this group is based on sales or leasing, as well as

license and/or maintenance fees applicable to software.

- ***Content Providers:*** The information a customer accesses when using the wireless Web may be made available through content providers (e.g. Reuters), content aggregators (e.g. digitallook.com), or portal providers (e.g. Yahoo!). For simplicity these threes types (or subsets) of companies are grouped here as "content providers." Content providers in the mobile industry currently tend to enter in exclusive agreements with network operators, giving rise to what is known as the "walled garden," where subscribers to specific network carriers gain access to an exclusive set of content providers. This is a symptom that is being addressed in efforts to provide a truly ubiquitous wireless network that is not only technologically compatible, but also offers unrestricted access of content to all mobile users regardless of carrier selection. The typical business model is based on advertising and subscription fees.

Table 3 helps explain the multiplicity of interactions in the m-Commerce industry by presenting the nature of the interaction between any two members of the m-Commerce value network (Figure 6).

M-COMMERCE REVENUE MODELS

There are several revenue models that are found in the m-Commerce market place, some of which involve customers, while others do not. Typically there are three revenue models that would involve payment by customers to any one or more of the value network members. These customer-initiated revenue models are access, subscription, and pay-per-use. Additional revenue models involve other members of the value network and are hence titled "non-customer initiated." The non-customer initiated revenue models are advertising, transaction, payment clearing, hosting, and point-of-traffic. All eight revenue models are explained below (Turban, 2002; Kalakota, 2002):

- ***Access:*** For customers to gain access and use a wireless network, an access fee is usually required. This fee is paid to the network operator directly or to the MSP (from which the network operator will eventually receive a portion, subject to the arrangement between the operator and the MSP). Access fees may be based on a flat, time-based, or volume-based rate. It should be noted that a "free access" model was introduced in the late 1990's, but for the most part it has proven to be unsuccessful—the MSP sought to collect revenue from advertising instead in an attempt to lure customers by offering network access for free. Flat rate pricing is a more commonly adopted model in North America and allows mobile users to access the network without any constraints. Time-based (or per-minute or by-the-minute, as it is also known) provides users with network access that is billable by the total airtime used. Time-based is a more commonly adopted access revenue model in Europe. Finally, volume-based allows users to access the network for as long as they want, because they will be billed based on the total volume of information, or number of bits, used during the billing period. This model is available for packet-switched (as opposed to circuit-switched) networks and was introduced in sight of the newer network technologies that will be faster and "always on."
- ***Subscription:*** Content providers can earn revenue through user subscriptions. Similar to the access revenue model, the subscription model is threatened when free alternatives are presented to con-

TABLE 3
m-Commerce Value Network Members Interactions

Value Network Members	Customers	Network Operators	Service Providers (MSPs)	Application Developers	Technology Vendors	Content Providers
Customers	N/A	Mostly businesses, acquire networking solutions or access operators' networks	Mostly consumers, acquire through MSPs access to operators' network service	Mostly businesses, acquire customized applications from developers	Acquire devices or accessories or networking solutions from vendors	Access content produced by content providers
Network Operators	Offer network access and networking solutions to mostly business customers	N/A	"Outsource" to MSPs the offering of consumer network access services	Engage in business partner programs to provide solutions to customer needs enabled through the underlying network technology	Acquire needed network technology from vendors	Coordinate efforts in offering content to subscribers
Service Providers (MSPs)	Offer network access to consumers and customized solutions to businesses	Acts as intermediary in the distribution of consumer network access services	N/A	May acquire products directly from application developers	Acquire products for customer customized solutions	Coordinate efforts in offering content for customer customized solutions
Application Developers	Offer customized applications to customers (mostly businesses)	Engage in business partnerships to provide solutions to customer needs through network technology	May offer their products directly to MSPs	N/A	Collaborate in embedding applications in hardware (e.g. devices).	Offer applications enhancing content published
Technology Vendors	Offer devices, hardware, and networking solutions	Supply needed network technology to network operators	Supply products for customer customized solutions or retail distribution	Coordinate efforts in embedding applications in hardware (e.g. devices)	N/A	Collaborate to ensure content is appropriate
Content Providers	Provide content to be accessed by customers	Coordinate efforts in offering content to subscribers	Coordinate efforts in offering content for customer customized solutions	Acquire applications that enhance customer experience while accessing content	Collaborate to ensure content offered subject to form factor, standards, etc.	N/A

sumers. To maintain a competitive advantage, companies adopting this revenue model need to differentiate their product/service offering so as to recruit and maintain customers.

- ***Pay-Per-Use:*** As an alternative to the subscription model, the pay-per-use model allows customers to purchase products/services/ without having to engage in a long-term commitment. Also, this model appeals to customers who do not want to pay for an entire product offering, but instead they might want to pay for a portion, such as a single song from an album rather than purchasing the entire album.
- ***Advertising:*** To capitalize on the popularity of certain websites, companies may pay content providers in exchange for advertising space. This is a beneficial arrangement for both parties involved, as advertising revenue will subsidize the cost of providing the service, allowing either end-user prices to decrease or to enhance their offering. Still, there are downsides (e.g. customer frustration and attrition) that need to be considered prior to engaging in the advertising revenue model. Currently, mobile advertising is still in its early stages. A variant of this model is the sponsorship revenue model—in this case features provided by other content providers are included on your site for a fee.
- ***Transaction:*** Often content made available for purchase belongs to a particular supplier and not necessarily the distributor with whom the customer is interacting. Based on the total cost of the product/service, a commission is collected by the distributor (intermediary). It is also possible to have the distributor purchase the product/service for resale; in this case the total revenue is collected by the distributor, who in turn pays the supplier the original cost of the goods sold.
- ***Payment Clearing:*** When a purchase is made wirelessly, a third party merchant collects a percentage of the total cost of purchase for processing the purchase made.
- ***Hosting:*** Content providers may lack the necessary technology and/or the expertise to host their own content. In this case they outsource hosting to companies that specialize in this area in exchange for a fee (e.g. monthly).
- ***Point-of-traffic:*** To encourage content development, which in turn will yield an increase in the subscriber base, network operators may pay out a rate to content providers based on the generated traffic to their websites. This source of revenue for content providers helps alleviate content development costs.

Having described the market players who interact within the m-Commerce value network, as well as the various revenue models that arise in those interactions, the focus of this paper will now turn to the wireless end-consumer (or m-Consumer, subset of the "customers" value network member) and to the business applications targeting m-Consumers.

AN M-COMMERCE CONSUMER-CENTRIC MODEL

In this section we present a model that helps define the value proposition to m-Consumers. The first step in the process of crafting this value proposition is to identify the m-Consumer interaction modes within a wireless environment. By reflecting on the m-Consumer's possible activities, one could identify the following entities with which interaction may be required or desired to various degrees:

- Businesses—involving a Wireless Business-to-Consumer (W_{B2C}) interaction mode. It is important to note that most such interactions would naturally

involve a Wireless Consumer-to-Business (W_{C2B}) interaction mode as well.

- Consumers – Involving a Wireless Consumer-to-Consumer (W_{C2C}) mode of interaction.
- Personal networks – Involving a Wireless Consumer-to-self (W_{C^2}) interaction mode.

These entities and interaction modes are illustrated in Figure 7, where the entities are shown in rectangular boxes, examples of these entities are shown in ellipses, and the arrows indicate the direction of the interaction (i.e. who initiated the action). Some interactions, shown by single-directed arrows, are performed solely by one entity, and do not necessarily receive a response by other entities (e.g. stock alerts). Other interactions, shown by double-directed arrows, require the active involvement of both parties in a mobile transaction (e.g. mobile retailing or m-Tailing). Any of the above types of mobile transactions require at least one entity to be using the wireless channel and may involve some wired participants. Finally, network operators are included in this model, but are not linked, because they provide the necessary infrastructure for these relationships to take place, or act as facilitators for supporting m-Commerce related activities.

Businesses refer to individuals or organizations that a consumer may need or want to interact with wirelessly for business-related purposes. In addition consumers may be at the receiving end of an interaction initiated by businesses. For the purposes of this paper $\mathbf{W_{B2C}}$ is used to refer to this type of interaction, without paying attention to which party initiated the interaction. Some examples of business applications in this area include retail and advertising offers directed at mobile consumers (m-Consumers). These applications are made available through the combined efforts of all members (excluding customers) of the value network introduced earlier (Figure 6).

m-Consumers refer to individuals that a consumer may need or want to interact with wirelessly for personal purposes. Some examples of this $\mathbf{W_{C2C}}$ type of interaction include communications (e.g. SMS or e-mail) and entertainment (e.g. gaming in a multi-player format).

Personal network refers to the server that a consumer owns and may want to access wirelessly for personal purposes. This type of interaction is identified through the notation $\mathbf{W_{C}^{2}}$. Examples of this type of interaction include a mobile user engaged in wireless communications with her/his home computer and its network, as well as any smart appliances, which

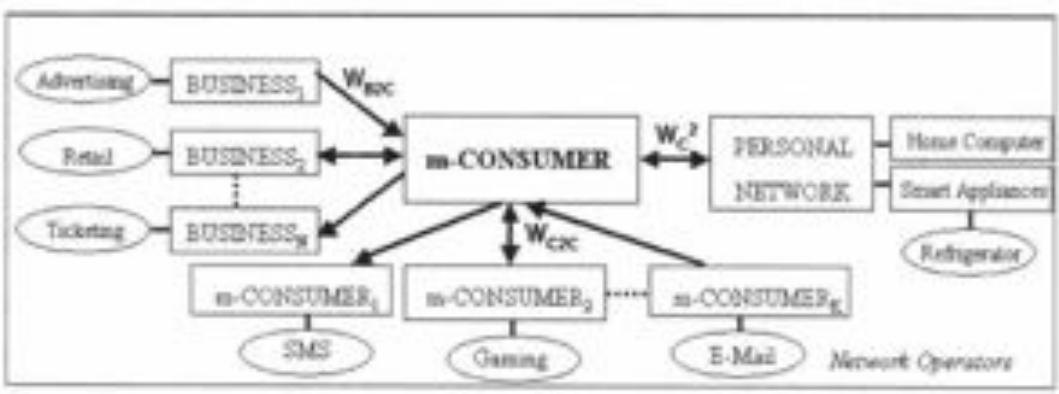

FIGURE 7
A Consumer-Centric m-Commerce Model

may be connected to that network (e.g. a refrigerator).

THE M-CONSUMER NEEDS & CONCERNS

There are five primary needs that yield demand for m-Commerce services. These are: connectivity, communication, information, entertainment, and commerce (Cole, 2001). These five needs stem from the mobility associated with the enabling devices, so the context for each of them revolves around the theme of "anytime, anywhere" accessibility. These needs are outlined in Figure 8, which also shows the relationships among these needs. Thus, connectivity is the main need because it provides the basic platform where wireless communications could take place, and communication in various forms is required to address the information, commerce, and entertainment need areas. Consequently, concerns surrounding connectivity and communication are also likely to affect the remaining consumer needs. All five needs are discussed in more detail below along with associated consumer concerns.

Connectivity Needs

Connectivity refers to having access to wireless networks including voice and Internet communications anytime and anywhere through various mobile devices. True connectivity is achieved through having access to ubiquitous mobile services. Ubiquity is not a trivial issue given the differences that exist in the wireless standards currently adopted in various parts of the world (Cutter, 2000). As indicated earlier, connectivity is the underlying requirement for mobile commerce and its applications.

Concerns

Consumer concerns surrounding connectivity involve the issues of security, reliability, download times, and cost, which are discussed below (Gillick, 2002).

Security: Consumer fears regarding the safety of the information exchanged over a wireless network increase with the degree of interaction and the sensitivity of the information exchanged. Applications that require less interaction and are less personal (e.g. weather notifications) present a lower security concern than those applications involving increased interaction and containing personal information (e.g. mobile banking). Therefore, appropriate security features need to be implemented for each type of mobile application (Daum, 2001; Badamas, 2001).

Reliability: For any extent of network coverage it is important that the connection quality be maintained (Mobile, 2001). The inherent

FIGURE 8
m-Consumer Needs

concern here is that loss of the connection can result in loss of data (Gillick, et al., 2000). This loss of data can yield anything from a simple interruption of Web surfing to loss of critical information used in financial transactions. The total cost for unreliable connections could be high, as it would encompass business losses and legal charges, including fees and fines.

Download times: Mobile users should not be forced to spend excessive amounts of time to access desired content (Cole, 2001). Internet users have been accustomed to wired Web transfer rates of 55.6Kb/s through dial-up connections, as well as an increasing customer base for high-speed connections of up to 300Kb/s. These speeds serve the purpose of accessing rich content in a reasonable amount of time (i.e. up to 10 seconds) (Nielsen, 2001).

Due to the above perceptions users expect similar services from a wireless device. Since the transfer rates for most wireless devices are currently 9.6Kb/s, wireless Web content has to be trimmed down from design elements, such as graphics and animations, to deliver the requested information in similar times. In the wireless arena it is even more important to provide fast download rates, as users are being billed for air-time either through a flat rate for a pre-specified limited number of minutes per month or by the minute. This is in contrast to the unlimited access models available for wired Internet connections.

Cost: Concerns in this area stem from the same experiences that came to influence user expectations of download times. In the case of wired Internet access, users now have the option of subscribing to different transfer rates, which come at different cost levels, subject to their individual needs. High-speed connections were introduced, while dial-up services were still maintained, thus satisfying a broader audience. Transferring this lesson to wireless networks, mobile carriers offering Internet access should rethink pricing options and strategies to successfully attract and retain a wider range of mobile customers. It is important to note that this cost concern impacts all other mobile consumer needs as well. Various wireless network access pricing models were discussed in under "The m-Commerce Value Network."

Communication Needs

Once a connection is established the fundamental need for a given mobile user is communication. Communication with others may be for business purposes, or for personal purposes (i.e. with other consumers or personal networks—refer to Figure 7), and may be carried out within an information, entertainment, or commerce context. Means by which an m-Consumer might choose to communicate include voice, text (e-mail, SMS), video, and data transfer.

Fulfillment of the need for communication presents industry with an opportunity to develop additional functions for mobile devices. For example, the European market capitalized on the penetration of cellular phones by extending the phone's capabilities to include features, such as SMS. In North America PDAs are the driving force behind m-Commerce and they seem to be converging in functionality with cell phones by offering modules for voice and/or video communication (Keyte, 2001).

Concerns

The benefit of being reached anywhere anytime may take its toll on users as they run the risk of being the victims of SMS spam, or even voice messages and phone calls placed by advertisers (Datamonitor, 2001). Although some abuse is expected to occur in this area, eventually these privacy-related issues would be minimized through customer reaction, carrier influence, and possibly enforcement (i.e. legislation, consumer groups, network carrier policies, etc.).

Another type of privacy concern for consumers in this area is that their location might be revealed to interested businesses at all times (Clarke, 2001). Knowing the whereabouts of each mobile user may be perceived as threat-

ening, as this information could be dangerous if intercepted. Examples of such fears include:

- Knowing where mobile users are makes it easier for them to become victims of attacks.
- Knowing that the residents of a home are away makes their residence vulnerable.
- Location-based advertising that targets consumers based on their geographic location.

Aside from privacy issues mobile users are concerned with the cost of communication for any of the various communication methods identified above.

Information Needs

Similar to the explosion of demand for information through the wired Web m-Consumers will increasingly start demanding information through mobile devices. This information may be similar to the general information found on the wired Web and can be categorized as being static or dynamic. Examples for these two categories would include a yellow pages-type directory (static) and cross-referencing of wireless websites for prices or specifications of a particular product (dynamic). In addition, mobile users will have access to location-specific information (e.g. finding a nearby restaurant based on the user's search criteria and current location). General information is already available for mobile users and will continually increase. Mobile-specific content is related to the growth of location-based services.

Concerns

A wide array of concerns exists in this area, including ubiquity, usability, privacy, cost, timeliness, freshness, and accuracy of information. Ubiquity, discussed under connectivity, is important, as mobile users should be able to access information irrespective of their location and device/network type. Extending from this concern for complete access to information, "walled gardens" (i.e. where content is limited to that provided by the user's network carrier) are viewed negatively by consumers, who want to have access to all available wireless content. Further, information should suit not only people's needs, but also the medium and the environment. For instance, content needs to be re-purposed for mobile devices, so that users can access easy-to-digest pieces of news, not replicated long articles from the wired web (McGinity, 2000). One way to deal with the problem of excess information is to make it partially available online through the wireless Web and allow users to point to their personal wired servers as a destination for saving big files for later examination, thus incurring no heavy airtime costs and freeing up their time by not forcing them to perform solely that single task. This notion ties in with usability, which raises the questions of how easy it is for the mobile user to access the information sought and what the quality of the overall experience is. Adherence to website design guidelines specified through research findings, along with use of available Web analytics tools, can help address this area of concern.

Privacy, in the information context, refers to a user's fear of other people/organizations knowing what s/he is interested in ("Big Brother syndrome"). Tracking user Internet-browsing behaviour and information requests on the wireless Web is a sensitive topic as it is for its wired counterpart. The ability to know the exact location of a user at all times further escalates the sensitivity of the Big Brother syndrome.

Cost refers to the pricing concern for the accessed information—how much, who, and how does someone pay for the information they access. Timeliness and freshness of the information highlight the importance of having informative content as it unfolds in near real-time (timely) and remains up-to-date as long as it remains published on the wireless Web (freshness). Finally, accuracy combined with timeliness and freshness will positively

impact consumer trust in the quality of presented information.

Entertainment Needs

Is "killing time" the "killer application?" Perhaps, but even if it doesn't have the impact that e-mail had for the wired Web, it is getting a lot of attention by the mobile industry, due to high user demand (Cohn, 2001). In general users want to turn to their mobile devices when they have a few minutes to kill and get useful and practical entertainment solutions, such as access to games or leisurely information. However, in some contexts (subject to culture and availability of entertainment alternatives) mobile devices may act as a primary source of entertainment.

Concerns

Mobile entertainment concerns revolve around connectivity, cost (pricing schemes for accessing this service/application), and usability. Connectivity concerns were already discussed above. Usability issues are subject to the nature of the application and to the specifics of the mobile device being used, but the following points can act as guidelines:

- Games should be either small enough in size to store on the mobile device or to download as needed. These games should also be re-configurable for different mobile devices.
- Ring tones, graphics, and other recreational elements should also have low resource requirements (i.e. file size, audio and video requirements, memory, etc.).

Finally, cost concerns arise regarding how much, and how does someone pay for the mobile entertainment service he/she receives.

Commerce Needs

Two main elements are required to enable mobile consumers to conduct m-Commerce transactions: presentation of product/service information (as discussed under "Information Needs") and a wireless payment mechanism. The value in consumers making payments wirelessly arises from the convenience it offers. For example, mobile users might not require coins/bills to make certain physical purchases (e.g. from vending machines), digital purchases (e.g. purchases on a wireless website), or even bill payments (e.g. Mobile Bill Presentment and Payment). Although several approaches for payment exist for mobile payments, three main options are predominant. These options are explained below:

- "Pre-pay" involves a physical/electronic deposit by the user to receive "credits" on her/his mobile device (i.e. smart card). These deposited funds could subsequently be used during wireless payment transactions (Pearse, 2001).
- The mobile user's bank account information is stored (either within the mobile device or in the service provider's database) and the specifics are transferred during the transaction, so that the merchant can automatically debit the user's account to collect payment (Bamber, 2001).
- The total cost of purchases is tracked by the wireless network carrier and presented on the monthly statement for the wireless service (i.e. similar to the credit card model) (Sadagopan, 2001).

The option that is becoming increasingly popular is pre-pay (McGinity, 2000), and along with mobile retailing, or m-tailing, presents new opportunities in shopping. Whether pre-pay serves as a primary method of paying, or acts merely as a back up method, the option is there for users to pay for bills (e.g. utilities, purchases, etc.) with their mobile devices, allowing for improved flexibility and convenience.

Concerns

Although the mobile payment option is available, companies should be aware that

consumers are not likely to purchase tactile goods or very expensive items online, let alone on their mobile devices. This lesson was learned from the e-tailing (electronic retailing) experience where consumers were highly interested in conducting pre-purchase research for expensive goods online but rather apprehensive about actually making such purchases remotely. m-Consumers are expected to exhibit the same type of behaviour and be reluctant to perform such purchases on their mobile devices. It is expected that m-Consumers will even hold back on conducting pre-purchase research on their mobile devices due to the costs involved as well as the limitations associated with such devices currently. m-Commerce, instead, appears to have already gained users' buy-in in Europe for purchasing small items, such as beverages from vending machines (Cole, 2001).

In addition security concerns exist because of the minimal security mechanisms in place for the millions of mobile devices. Security will become an increasingly important issue, as device capability and data sharing increase (Stone, 2000). This concern is complemented with concerns regarding the privacy of personal information that is required during payment transactions (Udo, 2001).

Through the above analysis of consumer applications several m-Consumer concerns were identified. The most prevalent concerns were cost, privacy, security, usability, reliability, and download times, as they were defined earlier in the paper. The next section discusses the responsibilities of the various m-Commerce value network members in addressing these concerns.

Addressing the m-Consumer Concerns

Having identified the m-Consumers' concerns in the various areas of interest for wireless services/products, we are now in a position to outline the responsibilities of the various members of the m-Commerce value network towards addressing these concerns. A summary of these responsibilities is provided in Table 4. While this summary is not exhaustive, it highlights the most pressing concern areas for consumers and the actions necessary to be taken by each of the m-Commerce value network members to help address them.

It is important to note that governments, legislative bodies, and watch dog organizations have a critical role to play towards addressing the areas of concern for the m-Consumer in using wireless services. Towards that end they can develop codes of ethical business conduct, and educate the various parties involved in the m-Commerce value network of their rights and responsibilities. They can also play a key role in enforcing wireless privacy/security regulations investigating any consumer complaints and resolving disputes that arise between the various members in the m-commerce value networks.

M-COMMERCE CONSUMER BUSINESS APPLICATIONS

This section will review various business applications targeting the mobile consumer and discuss how they address the inter-dependence of the three areas already discussed in this paper (i.e. wireless technology, m-Consumer interaction, m-Consumer needs/concerns); this discussion is summarized in Table 5. The characteristics identified for each business application, in the table, include the following:

- Consumer needs addressed by the business application.
- Interaction modes covered by the business application (referring back to Figure 7).
- Global market size (in users), unless otherwise noted, for the business application, if available.
- Perceived value and willingness to pay for the business application.
- Concerns associated with the business application.

TABLE 4
m-Commerce Value Network Members and Their Responsibilities Towards Addressing the m-Consumer Concerns

m-Commerce Value Network Members	*Cost*	*Privacy*	*Security*	*Usability*	*Reliability*	*Download Times*
Network Operators	Offer network access at reasonable rates	Disclose & enforce a strong privacy policy	Implement latest network security measures	N/A	Maintain high network reliability	Enhance/optimize networks to support high transfer rates
MSPs	Offer products & services at reasonable rates	Disclose & enforce a strong privacy policy; seek TTP approval	Endorse latest network security measures; seek TTP approval	Develop portals with high degree of usability	Maintain high system reliability; seek TTP approval	Enhance/optimize systems to support high transfer rates
Technology Vendors	Offer products at reasonable rates	Offer technology enhancing privacy in products	Implement latest device security measures	Develop devices with high degree of usability	Develop products with high reliability	Develop products supporting high transfer rates
Application Developers	Offer applications at reasonable rates	Offer measures to help support privacy protection in applications	Implement application security measures	Develop applications with high degree of usability	Develop applications with high reliability	Develop applications supporting high transfer rates
Content Providers	Provide content at reasonable rates	Disclose & enforce a strong privacy policy; seek TTP approval	Secure websites	Develop websites with high degree of usability	Develop websites with high reliability	Optimize web content for fast download

Notes: TTP = Trusted Third Party—an organization that provides web-trust seals verifying one or more of the following areas of best practices for the Internet: network reliability, application of security standards, enforcement of privacy, and authenticity of websites.

TABLE 5
Characteristics of m-Commerce Consumer Business Applications

Business Application	Needs[1] 1	2	3	4	Interaction Mode	User market in millions, 2005[2]	Value	Concerns	Technology Requirements[3]
Communication									
• Voice	•	•	•	•	W_{B2C} W_{C2C}	1268	Highest	Cost, Privacy	**1G** / 2.5G, Voice module
• SMS	•	•	•	•	W_{B2C} W_{C2C}	1268	Highest	Cost	**2G** / 2.5G, WAP 2.0
• e-Mail	•	•	•	•	W_{B2C} W_{C2C}	200[a] (by 2004)	Highest	Cost	**2G** / 2.5G, WAP 2.0
• Data Transfer	•	•	•	•	W_{B2C} W_{C2C} W_{C2}	2.8 (residential) 9.5 (Total)	Highest	Cost	2.5G / 3G
Information					W_{C2}				
• Web browsing	•	•	•	•	W_{B2C}	614	Highest	Cost, Usability	**2G** / 2.5G / 3G, WAP 2.0
• Traffic/Weather		•			W_{B2C}	N/A[1]	Highest	Privacy, Usability	**2G** / 2.5G, LBS[2]
Entertainment						775 (Total)			
• Gaming			•	•	W_{B2C} W_{C2C}	200[b]	Highest	Cost, Usability	**2G** / 2.5G / 3G, WAP 2.0
• News/Sports		•	•	•	W_{B2C}	N/A	High	Cost, Usability, Privacy	**2G** / 2.5G
• Downloading Music/Video/ Img.			•	•	W_{B2C}	N/A	Medium	Download times, Cost	2.5G / 3G, WAP 2.0
• Horoscope/ Lottery		•	•	•	W_{B2C}	N/A	Low	Cost, Privacy	**2G**
Commerce									
• Ticketing (e.g. Event, Cinema)		•		•	W_{B2C}	N/A	Highest	Cost, Usability, Security, Privacy	**2G** / 2.5G
• Pre-Payment				•	W_{B2C}	18.3 (by 2003)	Highest	Security	**2G** / 2.5G, Real-time Billing
• Banking		•		•	W_{B2C}	798	High	Security, Privacy	**2G** / 2.5G
• Advertising		•		•	W_{B2C}	$16-23 billion	Medium	Privacy (Spam)	2.5G/3G, LBS, WAP 2.0
• Retailing		•		•	W_{B2C}	469	Medium	Security, Privacy, Usability	2.5G / 3G, LBS, WAP 2.0

Notes: [1]Communication, 2. Information, 3. Entertainment, 4. Commerce
[1]N/A = Not Available, [2]LBS = Location-Based Service
[3]Available technology is in bold, while future technology is shown in normal font (note: 2.5 G is available, but not widely used)
Source: [a]iWirelessDevices, http://www.cannadreams.com/viewarticle.cfm?artcleid=941, excerpt from NRC Group 1999, http://www.appbid.com/industry/business/mobile/main.htm, & BuyCustomer.com 2000, http://cyberatlas.internet.com/markets/wireless/article/0,,10094_455141,00.html

- Technology requirements for the business application.

The applications presented in the table are those of highest interest to consumers, according to research (Daum, 2001; Wong, et al., 2001) and they often address multiple needs. For example, mobile banking would include options to access a user's account to obtain a balance, transfer funds, and even proceed with trading securities. This application, therefore, satisfies both the need to access information, as well as engage in commercial transactions. In general applications have been grouped under a need area in the first column of Table 5, according to which need they predominantly cater to.

Communication Applications

By examining the needs satisfied through the communication applications, it becomes apparent why satisfying the need for communication represents the foundation for satisfying all the remaining m-Consumer needs, as shown in Figure 8. From the "Interaction Mode" column in Table 5 it is evident that only communication applications target all of the different consumer interaction modes. As such these applications can cater to a wider audience who appear to be more interested in and more willing to pay for this type of applications.

Cost appears to be the primary concern and would thus require network carriers to revisit their pricing models, and have consequently come up with various options (i.e. subscription, pay-per-use) in an attempt to satisfy the different consumer preferences. Finally, with respect to technology, only "data transfer" is affected by the slow adoption of 2.5G, since voice, SMS, and e-mail can operate efficiently within existing technologies. Future enhancements exist in VoiceXML, the technology that will enable voice-driven applications, some of which is already available (e.g. speaking out the name of the person whose phone number is to be dialed). Enhancements are also expected in 3G networks and the WAP 2.0 protocol, which will support rich content in SMS and e-mail communications, as well as providing for higher transfer rates for data transfers.

Information Applications

These applications target the wireless B2C consumer interaction mode. A high consumer interest in these wireless information websites suggests the opportunity for content providers to start charging mobile consumers for their services, if they are not doing so already (i.e. subscription, pay-per-use). Cost and usability take front stage in terms of mobile consumer concerns, and along with network carriers and content providers rethinking their pricing models, content providers need to ensure a high level of usability to avoid customer dissatisfaction and potentially market attrition.

Finally, 2.5G and 3G network technologies will help improve the wireless Web experience and the available information could become rich in form, yielding higher customer appreciation and interest. In addition future location-based services could enable dynamic searching and comparison for location-specific information.

Entertainment Applications

Entertainment can involve various activities, some of which can satisfy various types of mobile consumer needs. Gaming appears to be currently the hottest segment with emphasis on the teenage and young adult community (Ovum, 2001). Until recently, however, this offering was limited due to protocol constraints (WAP did not allow for graphics and rich content). The next generation of protocols should be able to address this problem. As usual cost and usability are in the foreground as concerns, along with download times. For cost downloads can be purchased individually or through a subscription, giving m-Consumers added flexibility. A mobile user may seek entertainment for a short interval on a spontaneous basis. Therefore, excessive download times will not be well received. Finally, 2.5G and 3G

network technologies, along with the introduction of WAP 2.0, will help improve not only the gaming experience, but also other entertainment-related applications (Harmer, 2001).

Commerce Applications

Although gaming appears to be the short-term cash cow for m-Commerce, mobile banking presents the primary application for generating the much-needed critical mass in the near future, which in turn can yield significant revenues. In addition, banking is an application that is not a passing fad and subject to the latest video and audio technologies, rather it is an important provision for mobile consumers and their needs to save time from routine activities, such as going to the bank to pay a bill. Mobile banking is a key application for supporting the mobile payment mechanisms needed for other m-Commerce applications to take place.

Cost and usability are present concerns once again, but due to the sensitive nature of the information exchanged in a commercial transaction, security and privacy concerns prevail. The limitation in addressing these concerns effectively today lies in the existing infrastructure. Existing wireless networks and protocols can provide basic security, but frequently security features are sidestepped in return for time benefits (mobile users omit/deactivate security features to save on transmission time). Therefore, until upgraded networks and protocols supporting enhanced security are in place, mobile users may be reluctant to take advantage of these applications. Finally, m-Commerce industry players need to implement sufficient content to serve as incentive for not only converting consumers to mobile users, but also to retain these mobile users for the long run.

DISCUSSION & CONCLUSION

The m-Commerce industry is fast growing with estimates of reaching a user base of 1.3 billion people around the world by 2005, contributing to an overall market in excess of USD $22 billion. Industry players ranging from network carriers to content providers hope to capture part of this revenue. However, early results were not up to the hyped expectations due to a combination of reasons covered in this paper as technology limitations or consumer concerns to the various business applications (outlined under "M-Commerce Consumer Business Applications"). These concerns center on the issues of cost, speed, usability, security, and privacy. For m-Commerce to take off all of these concerns will have to be effectively addressed and collaboration among all value network members is essential. It should also be noted that health concerns, although not linked to any particular application, pose another barrier for adoption of wireless technology. On this issue the m-Commerce industry will need to clearly communicate any findings, so as to reduce fears of health hazards consequent of mobile device usage.

For the most part, the drawbacks found in using mobile devices for Web-based functions will be resolved in the near future, as advancements are being made simultaneously in wireless networks, wireless protocols, mobile devices, and supporting technologies. One area that deserves particular attention is related to content management. Issues in this area arise from the lack of compatibility and the absence of automated translation mechanisms between the wired and wireless Web environments. It may be the case that before long language interpreters or translators will convert a single website to any standard, taking into consideration the form factor involved. For now, these applications are still emerging, and organizations are required to go through the nuisance of running two separate sites (i.e. one for the wired Web and one for the wireless Web) and manage the associated complexities. Consequently, additional resources are required which are estimated at 30 percent over and above the cost of implementing an HTML Web site (Little, 2001).

Once technology-related problems are addressed effectively, the emphasis for market

players will shift to developing content and implementing effective m-Commerce business models. Businesses targeting m-Consumers need to understand that a Web-enabled mobile device does not necessarily guarantee a user who will take advantage of this capability. Currently, the success story for m-Commerce lies in the Far East, where Japan has successfully captured 30 million users in less than three years on their i-Mode platform. The reason for this success is largely due to the content that was made available early on, an element that was not present for WAP users in other regions (Levy, 2001). Development language and protocol limitations were partly responsible for this situation, but with WAP 2.0 addressing most of these concerns content providers need to take charge and give users something to go mobile for, other than communicating. "Content is king" may be an old cliché, but it holds true for this phase of m-Commerce, where users do not see a limitation of devices, but rather one of content, and are therefore reluctant to make the transition to the wireless Web.

From the discussion under "The M-Consumer Needs and Concerns" and "M-Commerce Consumer Business Applications," cost appears to be a major concern for most m-Consumers' needs and their corresponding business applications. Who will pay for content is a question that will draw a lot of attention and will require the cooperation of network operators, MSPs and content providers. For the time being, m-Consumers are mostly concerned with connectivity and communication costs. As discussed in under "M-Commerce Value Network and Revenue Models," the three prevailing billing options for these services are flat, time-based, and volume-based rate (McGinity, 2001b). Adopting a flat rate pricing model at this stage would be the best approach in developing markets to lure new customers fast, which is necessary to provide the much needed critical mass to alleviate the development costs and in particular the high license fees for network carries engaged in implementing 3G network technology. The basis for this recommendation lies in the following two observations: First, users have been accustomed to flat-rate schemes with ISPs and cell phone providers, for example. Second, users are in favour of flat-rate schemes, because of the model's simplicity and the ability to control expenses.

Once a critical mass has been established, different means for pricing may be adopted, and even a combination of models may become available for any particular region. At that point, pricing based on the data in/outflow would be favored by wireless operators, because it would serve as an indirect control on the use of the networks and would help prevent network overload, a situation presently felt by many mobile phone subscribers.

Another dimension to the cost issue is who ends up paying for a wireless interaction in an m-Commerce transaction. In North America both the caller and the receiver of a wireless communication pay their providers for that interaction under current pricing schemes. This scheme represents a significant obstacle to the spread of m-Commerce, as consumers will resist having to pay for unsolicited offers received from businesses on their wireless devices. A pricing model, in which the initiator of an m-Commerce interaction is responsible for footing the bill, would be a significant boost for the consumers' involvement in m-Commerce activities.

Finally, it is even conceivable that the above models will eventually be replaced by a free, unlimited access for the user subject only to a rental cost for the device and using m-Commerce fees to offset the remaining costs. These fees may be derived from notification services (paid by user), advertising (paid by advertising company), transaction fees on mobile purchasing (paid by merchants, similar to Interac and credit cards), and further means yet to be identified as the m-Commerce market evolves (Simon, 2000).

Future research in this area should focus on issues related to devising m-Commerce business models that can take full advantage of the fast unfolding technological improvements in

the areas of wireless networks, devices, and protocols. Such models will have to pay close attention to satisfying the needs of m-Consumers while minimizing their concerns. Another area of key importance for future research in this field is the usability of both mobile devices and m-Commerce Websites since it is highly related to the rate of adoption of m-Commerce activities by m-Consumers.

NOTES

1. TDMA: Time Division Multiple Access, CDMA: Code Division Multiple Access, GSM: Global System for Mobile Communications.
2. HSCSD: High-Speed Circuit-Switched Data, GPRS: General Packet Radio Services, EDGE: Enhanced Data GSM Environment.
3. W-CDMA: Wideband CDMA, UMTS: Universal Mobile Telephony System.

REFERENCES

Badamas, M. (2001). "Mobile computer systems—security considerations," Information Management & Computer Security," Vol. 9 No 2, pp. 134-136.

Bamber, T. (2001). "The future of m-banking," m-Commerce World, http://www.internetworld.co.uk/mcomm/vRoot/articles/article.cfm/D41A F5FF-00F5-11D5-A04E00C04FA0E16A, accessed June 3, 2001.

Buckingham, S. (2000). "Yes 2 GPRS", Mobile Streams, August 2000, http://www.mobilewhitepapers.com/pdf/gprs.pdf, accessed May 31, 2002.

Bushell, S. (2001). "m-Commerce key to ubiquitous Internet," Computerworld, http://computerworld.idg.com.au/, accessed January 12, 2002.

Canvas Dreams (2001). "Global Market Statistics for Mobile Commerce, Part Two", http://www.canvasdreams.com/viewarticle.cfm?articleid=943, accessed June 6, 2002.

Clarke, R. (2001). "Person location and person tracking: Technologies, risks and policy implications," Information Technology & People, Vol. 14 No. 2, pp. 206-231.

Cohn, M. (2001). "Destroying American Productivity," m-Commerce World, http://www.internetworld.co.uk/mcomm/vRoot/articles/article.cfm/D9E7 55A9-4CC7-11D5-A05300C04FA0E16A, accessed June 26, 2001.

Cole, C. (2001). "5 things I want from my mobile," m-Commerce World, http://www.internetworld.co.uk/mcomm/vRoot/articles/article.cfm/B6D4ACE6-D1D4-11D4-BEE900B0D0A143DF, accessed June 3, 2001.

Cutter Consortium (2000). "Cutter Technology Council Predicts $580 Billion in Future Credit Card Transactions over the Wireless Web," October 31, 2000, http://www.cutter.com/consortium/research/2000/crb001031.html, accessed June 6, 2002.

CWTA (2002). "Average Monthly Revenue Per Cellular/PCS User in Canada," Canadian Wireless Telecommunications Association, http://www.cwta.ca/industry_guide/facts_files/arpu.htm, accessed May 29, 2002.

Datamonitor (2001). "Wireless Advertising: Opportunities and Challenges", 2001.

Daum, A. (2001). "Mobile Consumers: What do they want? How much will they pay?", GartnerG2, April 2001.

Gasci, J. (2001). "Mobile Commerce Solutions Guide using WebSphere Commerce Suite V5.1," IBM, http://publib-b.boulder.ibm.com/Redbooks.nsf/RedbookAbstracts/sg246171.html?Open, accessed June 6, 2002.

Gillick, K., & Vanderhof, R. (2000). "MOBILE E-COMMERCE," Smart Card Forum Annual Meeting, September 25-28, 2000.

Harmer, J. (2001). "3G Products—What will the Technology Enable?", BT Technology Journal, Vol. 19 No. 1, pp. 24-31.

ITU (2001). "The road to IMT-2000," International Telecommunication Union, http://www.itu.int/imt/what_is/roadto/index.html, accessed June 3, 2001.

Jonason, A., and Eliasson, Gunnar (2001). "Mobile Internet revenues: An empirical study of the I-mode portal," Internet Research: Electronic Networking Applications and Policy, Vol. 11 No. 4, pp. 341-348.

Kalakota, R., and Robinson, M. (2002). "M Business: The Race to Mobility," McGraw Hill, 2002, pages 16-17.

Kalluvilayil, S. (2001). "Owning the Wireless Customer Experience," Edgecom, July 13, 2001.

Keyte, C. (2001). "It's not about the phones!", m-Commerce World, http://www.internetworld.co.uk/mcomm/vRoot/articles/article.cfm/A0154 418-21C5-11D5-A04E00C04FA0E16A, accessed June 3, 2001.

Levy, S. (2001). "Calling The Net," Newsweek, July 13, 2001, http://www.msnbc.com/news/599997.asp?cp1=1, accessed June 3, 2001.

Little, J. (2001). "m-Commerce," imaring! CJRW, http://www.cjrw.com/imazing/mcommerce.html, accessed January 12, 2002.

Malloy, A., Varshney, U., and Snow, A. (2002). "Supporting Mobile Commerce Applications Using Dependable Wireless Networks," Mobile Networks and Applications, Vol. 7 No. 3, pp. 225-234.

McGinity, M. (2000). "Bumpy Road Ahead for m-Commerce," Inter@ctive Week, February 21, 2000, http://www.zdnet.com/intweek/stories/news/0,4164,2445298,00.html, accessed June 3, 2001.

McGinity, M. (2001b). "The Net/Wireless Meeting of the Minds," Inter@ctive Week, June 25, 2001, http://www.zdnet.com/zdnn/stories/news/0,4586,2457813,00.html, accessed June 3, 2001.

Mobile Media Japan (2001). "Bringing Carriers Closer to Customers: One on One with Giles Richter, Mobile Content Forum," May 1, 2001, http://www.mobilemediajapan.com/company/news1.html, accessed May 28, 2002.

Morrison, D. (2001). "Technology Push and Customer Pull: The Wireless Internet Comes of Age," Presentation at McMaster University, October, 2001, (after Goldman Sachs Research).

Morrison, D. (2001b). "Technology Push and Customer Pull: The Wireless Internet Comes of Age," Presentation at McMaster University, October, 2001, (after Ovum).

Napier, C. (2002). "Overcoming declining ARPU: carriers and content providers, working together," WirelessReport.Net, January/February 2002, http://www.wirelessreport.net/guest-columns/january/chucknapier.html, accessed June 1, 2002.

Nielsen, Jakob (2001). "Designing Web Usability," http://www.webreference.com/new/nielsen-book.html, accessed June 6, 2002.

NTT DoCoMo (2002). "Average Revenue Per User (monthly)," http://www.nttdocomo.com/home.html, accessed May 30, 2002.

Ong, C. (2001). "Hong Kong Post Offers First m-Cert Service," South China Morning Post, October 9, 2001, http://www.diversinet.com/newsevents/articles/SouthChinaMorningPost.shtml, accessed June 6, 2002.

Pearse, J. (2001). "It's all in the game," m-Commerce World, http://www.internetworld.co.uk/mcomm/vRoot/articles/article.cfm/91D685BD-3F87-11D5-A05100C04FA0E16A, accessed June 3, 2001.

Peck, A. (2001). "WAP's summer of discontent," m-Commerce World, http://www.internetworld.co.uk/mcomm/vRoot/articles/article.cfm/87DB2C1B-D4FC-11D4-A9E300C04FA0E16A, accessed June 3, 2001.

Pocket Directory (2001). "Smart Phones," http://www.pocketdirectory.com/hardware/bproducts.aspx%dCat=4&sel Hld=1, accessed June 6, 2002.

Sadagopan, S. (2001). "How m-commerce works," http://www.iiith.ac.in/ss/Writings/ZDNet/How%20m-commerce%20work s.htm, accessed June 6, 2002.

Simon, H. (2000). "Sinking Your Teeth Into m-Commerce," Intelligent Enterprise, August 18, 2000, http://www.intelligententerprise.com/000818/supplychain.shtml, accessed June 6, 2002.

Stone, A. (2001). "Ten Key Trends in Mobile Commerce For 2002/2002," m-Commerce Times, June 13, 2001, http://www.mcommerce-times.com/Industry/136, accessed June 6, 2002.

Turban, E., Lee, J., Warkentin, M., and Chung, M., (2002). "Electronic Commerce: A Managerial Perspective, 2002," Prentice Hall, page 867.

Ovum (2001). "Mobile Gaming," October 23, 2001, http://www.nua.net/surveys/index.cgi?f=VS&art_id=905356023&rel=true, accessed June 6, 2002.

Udo, Godwin (2001). "Privacy and security concerns as major barriers for e-commerce: a survey study," Information Management & Computer Security, Vol. 9, No. 4., pp. 165-174.

WAP Forum (2001). "WAP 2.0 Technical White Paper," http://www.wapforum.com/what/WAPWhite_Paper1.pdf, accessed June 6, 2002.

Wong, R., and Jesty, R. (2001). "The Wireless Internet: Applications, Technology, and Market Strategy," ARC Group, September 10, 2000, http://www.arcgroup.com/press/rel_wirelessint.htm and http://www.allnetdevices.com/wireless/opinions/2001/01/10/the_wireless .html, accessed June 6, 2002.

Yanis, R., Block, J., and Liew, T. (2002). "Wireless Services," Bank of America Securities, April 12, 2002, http://www.bofasecurities.com/feature-drresearch/content/docs/IndustrySubGrowth-04-12-02.pdf, accessed May 29, 2002.

724 Solutions (2000). "Commerce goes mobile: A service provider's guide to navigating opportunity, hype and reality," http://www.724.com/, accessed January 12, 2002.